John Deere
450C
Crawler

TECHNICAL MANUAL

TM1102
LITHO IN U.S.A

JD450-C CRAWLER

Technical Manual
TM-1102 (May-87)

CONTENTS

The specifications and design information contained in this manual were correct at the time it was printed. It is John Deere's policy to continually improve and update our machines. Therefore, the specifications and design information are subject to change without notice.

Litho in U.S.A.

Copyright© 1987
DEERE & COMPANY
Moline, Illinois
All rights reserved
Previous Editions
Copyright© 1986 DEERE & COMPANY
Copyright© 1980 DEERE & COMPANY
Copyright© 1979 DEERE & COMPANY
Copyright© 1976 DEERE & COMPANY
Copyright© 1974 DEERE & COMPANY
Copyright© 1973 DEERE & COMPANY

INTRODUCTION

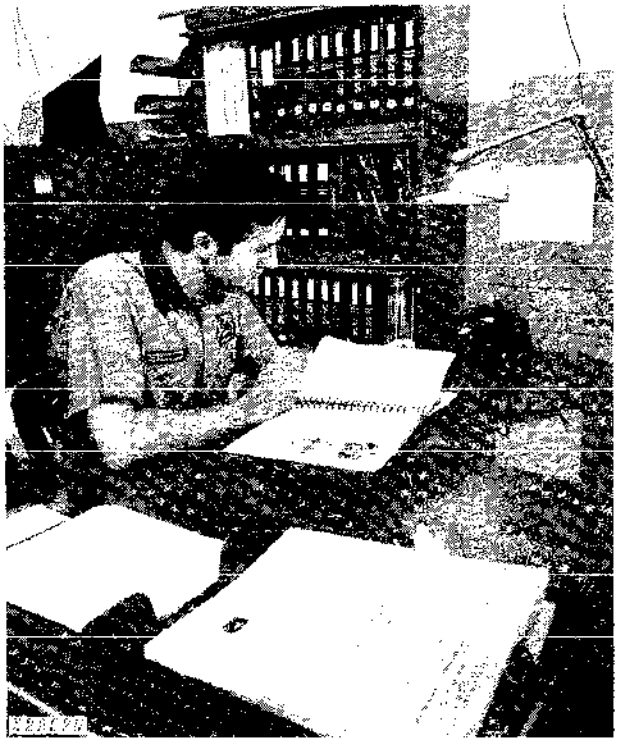

Use FOS Manuals for Reference

Use Technical Manuals for Actual Service

This technical manual is part of a twin concept of service:

The two kinds of manuals work as a team to give you both the general background and technical details of shop service.

•FOS Manuals—for reference

Fundamentals of Service (FOS) Manuals cover basic theory of operation, *fundamentals* of trouble shooting, *general* maintenance, and *basic* types of failure and their causes. FOS Manuals are for training new personnel and for reference by experienced personnel.

When a service technician should refer to a FOS Manual for more information, a FOS symbol like the one at the left is used in the TM to identify the reference.

•Technical Manuals—for actual service

Technical Manuals are concise service guides for a *specific* machine. Technical manuals are on-the-job guides containing only the vital information needed by an experienced mechanic.

This technical manual was planned and written for you—an experienced mechanic. Keep it in a permanent binder in the shop where it is handy. Refer to it whenever in doubt about correct service procedures or specifications.

Some features of this manual:

- Inside front cover - "Table of Contents" and "Maintenance Without Accident".
- Section 10 - General specifications and services.
- Sections 20 through 60 - Removal, repair, testing (components removed), installation, and adjustment.
- Section 70 - Detailed explanation of system operation, diagnosis, visual inspection, testing, and adjustments.
- Specifications grouped and illustrated at the end of each section.

Litho in U.S.A.

Thanks very much for your reading,

Want to get more information,

Please click here, Then get the complete manual

JustClickHere

NOTE:

If there is no response to click on the link above, please download the PDF document first, and then click on it.

Have any questions please write to me:
admin@servicemanualperfect.com

MAINTENANCE WITHOUT ACCIDENT
WORK SAFELY

This safety alert symbol identifies important safety messages in this manual and on the crawler. When you see this symbol, be alert to the possibility of personal injury and carefully read the message that follows.

EVERY EMPLOYER HAS A SAFETY PROGRAM. KNOW WHAT IT IS!

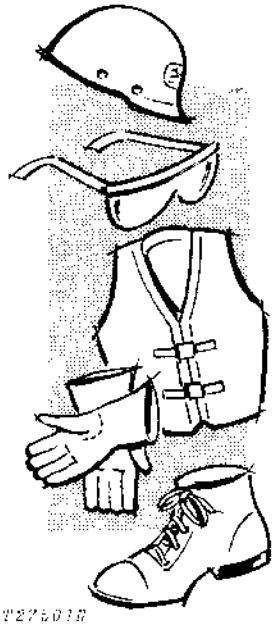

Consult your shop supervisor for specific instructions on a job, and the safety equipment required.

For instance, you may need: Hard hat, safety shoes, safety goggles, heavy gloves, reflector vests, ear protectors, respirators.

ALWAYS AVOID loose clothing or any accessory—flopping cuffs, dangling neckties and scarves, or rings and wrist watches—that can catch in moving parts and put you out of work.

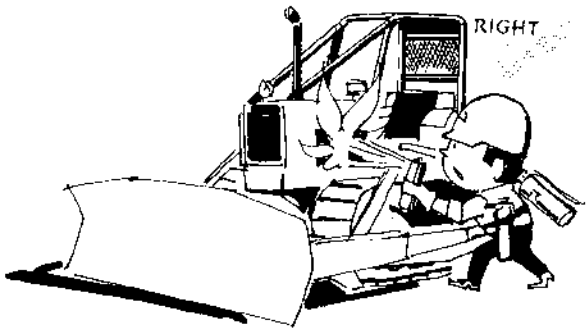

BE ALERT!

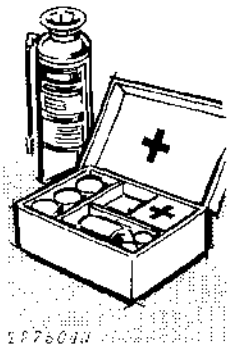

Plan ahead — work safely — avoid accidental damage and injury. If a careless moment does cause an accident or fire, react quickly with the tools and skills at hand — know how to use a first aid kit and a fire extinguisher — and where to get assistance. In an emergency, split-second action is the key to safety.

Litho in U.S.A.

MAINTENANCE WITHOUT ACCIDENT

Specific safety procedures should always be observed, whether servicing the equipment or making the repairs. Remembering these—in time!—can prevent an injury . . . or save your life . . . .

AVOID FIRE HAZARDS—

Fuel is Dangerous!

Don't smoke while refueling.

Don't smoke while handling highly flammable material.

Shut off engine when refueling.

Use care in refueling if the engine is hot.

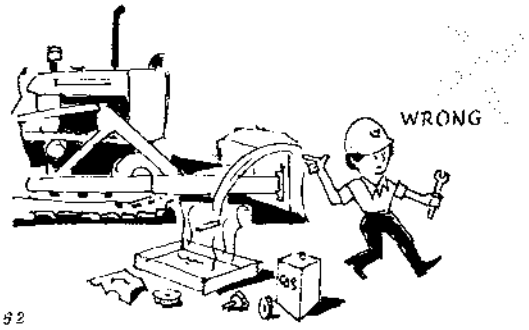

T31992

Don't use open pans of gasoline or diesel fuel for cleaning parts. Good commercial, nonflammable solvents are preferred.

Battery Gas Is Highly Flammable!

Provide adequate ventilation when charging batteries.

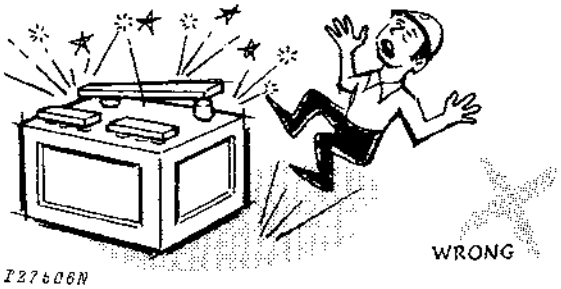

T27606N

Don't check battery charge by placing metal objects across the posts.

Don't allow sparks or open flame near batteries.

Don't smoke near battery.

Flame Is Not a Flashlight!

Never check fuel, battery electrolyte or coolant levels with an open flame.

Never use an open flame to look for leaks anywhere on the equipment.

Never use an open flame as a light anywhere on or around the equipment.

KNOW WHERE FIRE EXTINGUISHERS ARE KEPT!

UNDER ALL MAINTENANCE CONDITIONS—

Do not perform any work on the equipment unless authorized to do so. Then be sure you know what you're doing. Follow recommended procedures.

Never service the equipment while it is being operated.

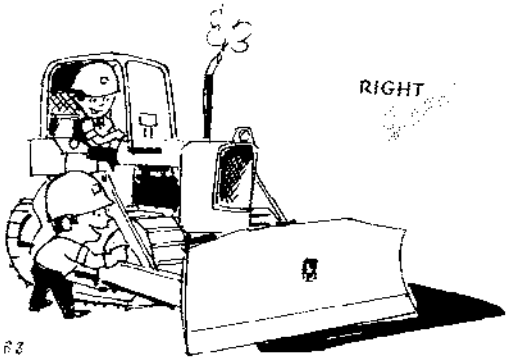

T31263

Avoid working on equipment with the engine running. If it is necessary to make checks with the engine running, **ALWAYS USE TWO SERVICE TECHNICIANS**—one, the operator, at the controls, the other checking within sight of the operator. Also, put the transmission in neutral, set the brake lock, and apply any safety locks provided. **KEEP HANDS AWAY FROM MOVING PARTS.**

T27506N

Litho in U.S.A.

MAINTENANCE WITHOUT ACCIDENT

Before servicing, adjusting, or repairing crawlers which have attachments such as dozers, blades, etc.—**LOWER** attachments to the ground—or, if necessary to raise them for access to certain parts, **SECURELY SUPPORT** by external means. **DO NOT** rely on controls to support or position attachments for maintenance.

Never allow **ANYONE** to walk under equipment that is raised and not properly blocked.

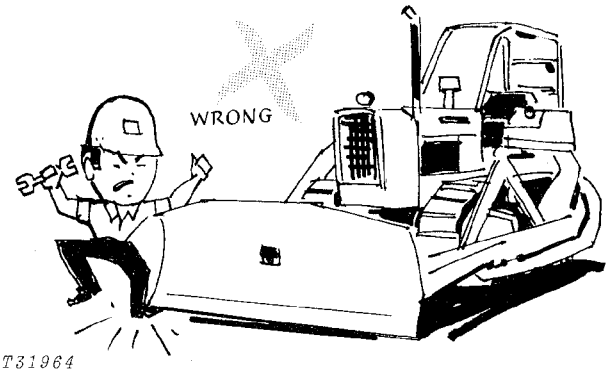

T31964

Avoid working directly under raised and blocked equipment unless absolutely necessary.

If the machine is on an incline, block it securely.

Use hoisting equipment for lifting heavy parts. **TAKE CARE! WATCH OUT FOR OTHER PEOPLE IN THE VICINITY.**

Use extreme caution in removing radiator caps, drain plugs, grease fittings, or hydraulic pressure caps.

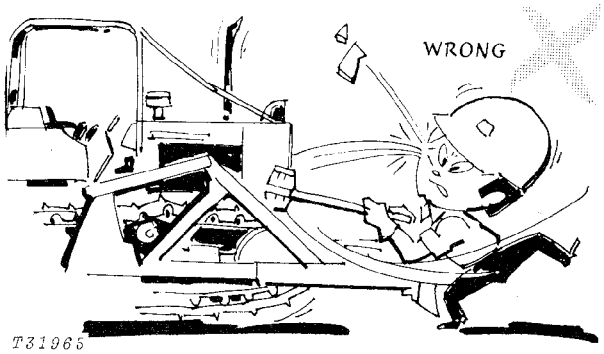

T31965

Wear safety glasses when drilling, grinding, or hammering metal.

Make sure the maintenance area is adequately vented.

Keep maintenance area CLEAN AND DRY. Oily and wet floors are slippery; greasy rags are a fire hazard; wet spots are dangerous when working with electrical equipment.

Store starting aids in a cool and well-ventilated place, out of the reach of unauthorized personnel.

SERVICING PRECAUTIONS

Stop the engine before cleaning or lubricating the equipment.

Lower mounted equipment and tools to the ground *carefully.*

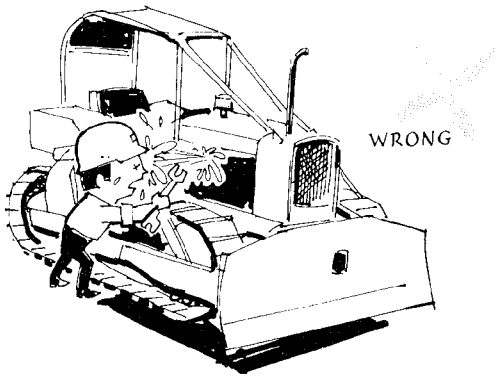

T31966

Engine coolant gets hot! Don't remove the radiator cap until coolant temperature is below the boiling point. Then turn cap slightly to relieve pressure before removing.

Exhaust gases are dangerous! Periodically check exhaust system for excessive leakage.

Don't forget a hydraulic system may be pressurized! To relieve pressure, stop engine and lower boom. Operate hydraulic control levers until system fails to respond.

When checking hydraulic pressure, be sure to use the correct test gauge for the pressure in the particular system.

MAINTENANCE WITHOUT ACCIDENT

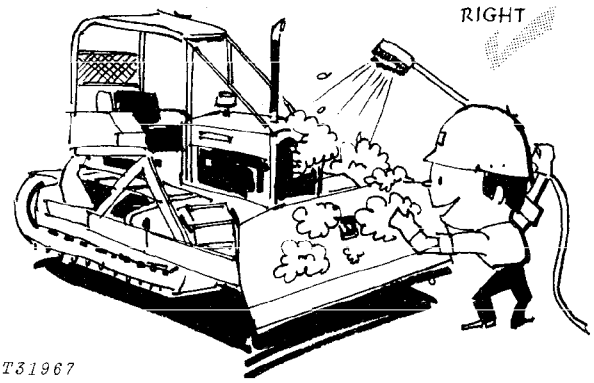

T31967

Keep ALL equipment free of dirt and oil. This attention will minimize fire hazards and facilitate spotting of loose or defective parts.

When preparing engine for storage, remember that inhibitor is volatile and therefore dangerous. Seal and tape openings after adding the inhibitor. Keep container tightly closed when not in use.

ADJUSTING PRECAUTIONS

. . . . for Operating Adjustments

Keep clutch and brake control units properly adjusted at all times. Before making adjustments, stop engine.

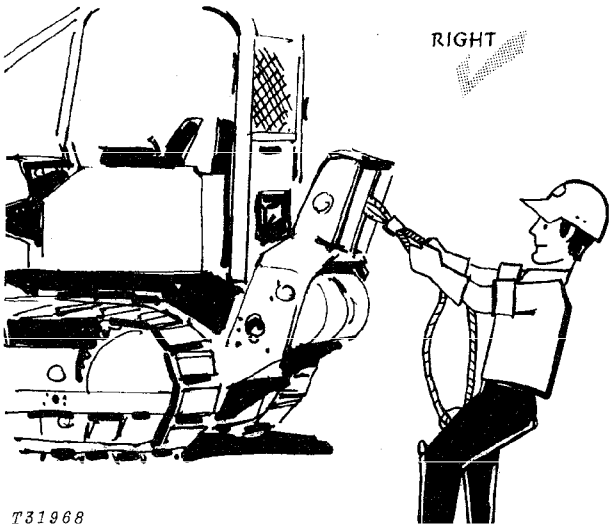

T31968

Always wear gloves when handling cable.

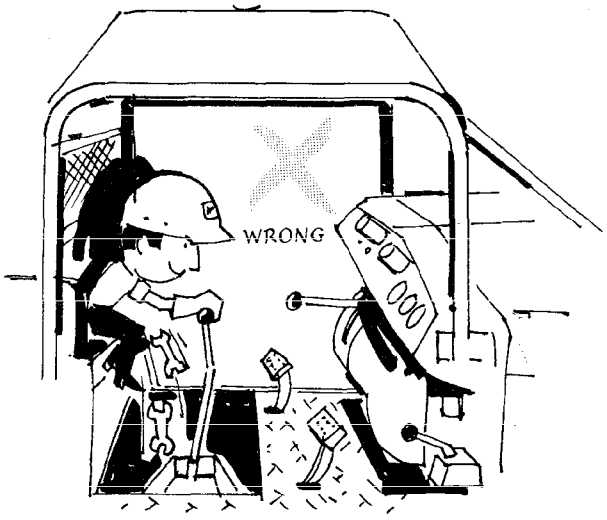

T31969

Before removing any housing covers, stop engine. Take all objects from your pockets which could fall into the opened housings. Don't let adjusting wrenches fall into opened housings.

. . . . for Maintenance Adjustments

Don't adjust the fuel system while the machine is in motion.

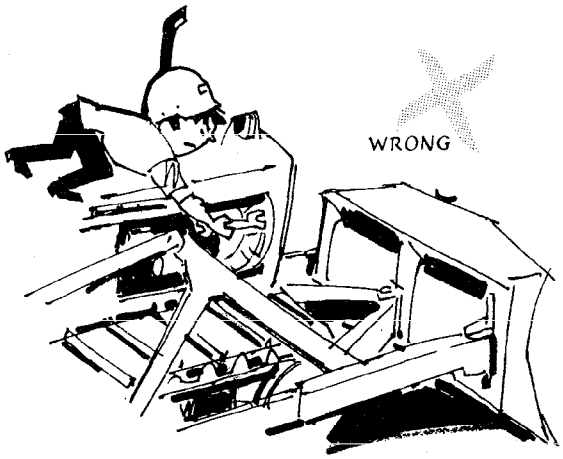

T31970

Don't attempt to check belt tension while the engine is running.

MAINTENANCE WITHOUT ACCIDENT

PRECAUTIONS DURING REPAIR

Before working on the engine fuel system—close fuel shutoff valve.

Before working on hydraulic system—make sure engine is not running and the system pressure is relieved by working the control levers in all directions with the engine shut off.

Before repairing the electrical system, or performing a major overhaul, make sure the batteries are disconnected.

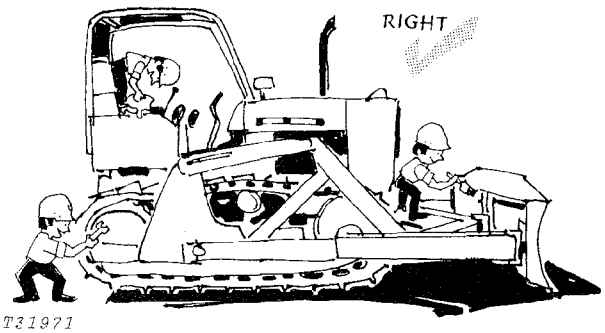

T31971

Keep all equipment free of dirt and oil. This attention will minimize fire hazards and facilitate spotting of loose or defective parts.

When changing cutting edges on blade—

Stop the engine and securely block the blade.

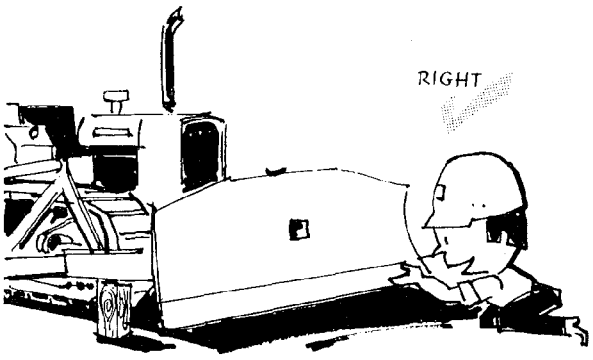

T31972

Never let your bare hands come in contact with the sharp edges. WEAR GLOVES.

MAINTENANCE WITHOUT ACCIDENT

KNOW EQUIPMENT IS READY!

Check guards, canopies, safety bars—all protective devices installed on the crawler. Every one should be in place and secure.

CHECK IT OUT!

- ☐ GUARDS
- ☐ CANOPIES
- ☐ SHIELDS
- ☐ PROTECTIVE DEVICES
- ☐ ROLL-OVER PROTECTIVE STRUCTURES
- ☐ SEAT BELTS, ETC.

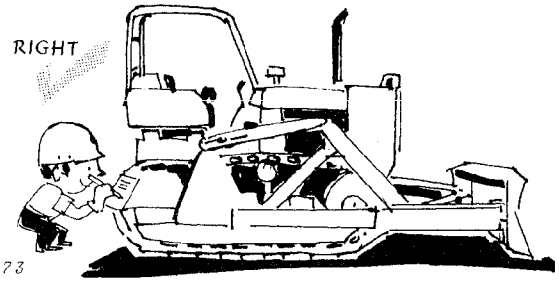

T31973

Carefully inspect equipment for visual defects—leaks in fuel, lubrication, and hydraulic systems. Do not search for pressurized fluid leaks with your hands. Use cardboard or wood to search for leaks.

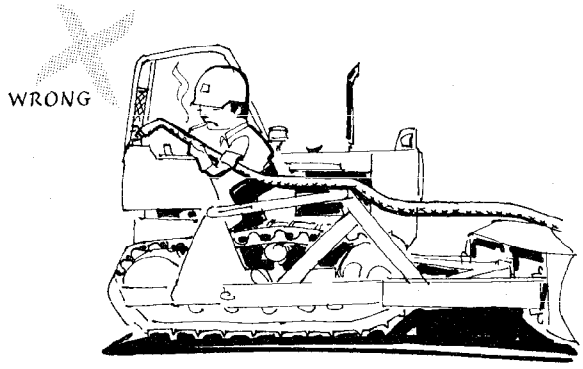

T31974

Check levels of fuel, coolant, hydraulic fluid, and lubricating oil. If fuel must be added—**FIRST, PUT OUT THAT CIGARET.**

Check and secure all caps and filler plugs for fuel, oils, radiator, etc.

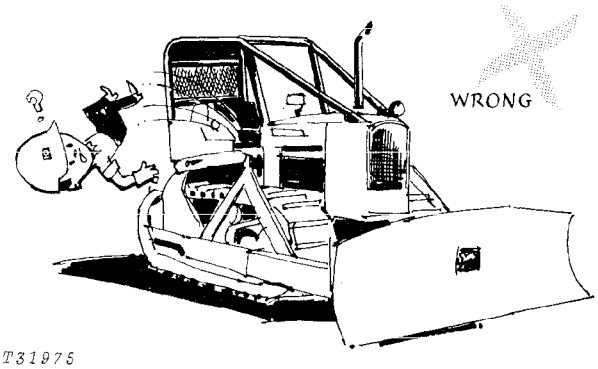

T31975

Be sure to clean any oil, grease or mud accumulation from floor of operator's compartment, stepping points, and grab rails to minimize the danger of slipping.

In freezing weather beware of snow or ice deposits on stepping points, grab rails, and floor.

Remove loose bolts, tools, or other objects from floor of operator's compartment.

Although it is impractical to try to cover every possible maintenance situation, the safety precautions recommended here should serve to develop and promote safe maintenance procedures.

The information contained in this manual is not intended to replace safety codes, insurance requirements, federal, state, and local laws, rules and regulations. In particular, your service area or jobsite activities may be subject to state safety rules and/or federal regulation under the Occupational Safety and Health Act (OSHA). Familiarize yourself with all regulations applicable to your situation in order to avoid possible safety violations.

Illustrations and copy reproduced in part by permission of Construction Industry Manufacturers' association (CIMA).

Litho in U.S.A.

Section 10
GENERAL

CONTENTS OF THIS SECTION

Group 5
GENERAL MACHINE SPECIFICATIONS

(Specifications and design subject to change without notice. Wherever applicable, specifications are in accordance with ICED and SAE standards. Except where otherwise noted, these specifications are based on a unit equipped with [1-1/4 cu. yd. (0.96 m³) digging bucket w/teeth (loader)], diesel engine, roll-over protective structure and standard equipment.)

Power (@ 2,500 engine rpm):	SAE	DIN
Gross	70 hp	
Net	65 hp	65.9 PS
Drawbar (Dozers)	48.6 hp	49.3 PS

Net engine flywheel power is for an engine equipped with fan, air cleaner, water pump, lubricating oil pump, fuel pump, alternator and muffler. The gross engine power is without fan. Flywheel power ratings are under SAE standard conditions of 500-ft. (150 m) altitude and 85°F (29°C) temperature and DIN 70 020 standard conditions (non-corrected). No derating is required up to 10,000 feet (3000 m) altitude.

In the international system of units (SI), power is expressed in kilowatts (kW).

ENGINE:
John Deere, 4-cylinder, turbocharged diesel, 4-stroke cycle

Bore and stroke .... 4.02 x 4.33 in. (102 x 110 mm)
Piston displacement ..... 219 cu. in. (3 588 cm³)
Compression ratio ..... 16.2 to 1
Maximum torque @ 1,400 rpm ..... 164.5 lb-ft (22.74 kg-m)
NACC or AMA (U.S. Tax) horsepower 23.84
Lubrication ..... Pressure system with full-flow filter
Main bearings 5
Cooling ..... Pressurized with thermostat and fixed bypass
Fan ..... Blower
Air cleaner with restriction indicator ..... Dry
Electrical System ..... 12-volt with alternator
Battery ..... Reserve capacity: 180 minutes

TRANSMISSION:
H-L-R: 4 gears with high, low and reverse ranges shifted hydraulically without clutching in each range.

CLUTCH ..... 11-in. (279 mm) single-disk

STEERING:
Steering clutches and brakes are controlled by a single lever for each track. A pedal provides braking, and lock-down for parking.
Clutches ..... Oil-cooled, hydraulically-actuated, multiple-disk, 11-in. (279 mm) disk; 16 friction surfaces per clutch
Brakes .... Self-adjusting, self-energizing, oil-cooled contracting band with bonded lining.

Gear:	Travel Speeds: mph	km/h	Max. Drawbar Pull (Dozer) (with adequate weight and traction) lb.	kg
1st Gear				
Low	1.3	2.1	18,050	8 188
High	1.8	2.9	12,600	5 715
Reverse	1.7	2.7		
2nd Gear				
Low	2.0	3.2	10,050	4 559
High	2.8	4.5	7,050	3 197
Reverse	2.7	4.3		
3rd Gear				
Low	3.0	4.8	6,400	2 903
High	4.3	6.9	4,250	1 928
Reverse	4.1	6.6		
4th Gear				
Low	4.7	7.6	3,500	1 588
High	6.7	10.8	2,350	1 066
Reverse	6.4	10.3		

DOZER HYDRAULIC SYSTEM:
6405 Control ..... Single "T-bar", triple hydraulic system
6410 and 6415 Control ..... Single-lever, double hydraulic system
Pump ..... Gear, 15 or 23 gpm (57 or 87 Lpm)
Pressure ..... 1,750 psi (123.0 kg/cm²)

LOADER HYDRAULIC SYSTEM:
Control ..... Single-lever, triple hydraulic system
Pump ..... Gear, 28 gpm (106 Lpm)
Pressure ..... 2,250 psi (158.2 kg/cm²)
Oil lines ..... Seamless steel tubing; double-wire-braid hose
Filter ..... Micronic in return line

LOADER HYDRAULIC CYLINDERS:	Bore	Stroke
Boom, two ..	4.25-in. (108 mm)	28.25-in. (718 mm)
Bucket, two	3.5-in. (89 mm)	31.1-in. (790 mm)

Cylinder rods .. Ground, heat-treated, chrome-plated, polished
Boom cylinder rods ..... 2.25-in. (57 mm) dia.
Bucket cylinder rods ..... 1.75-in. (44 mm) dia.

BULLDOZER HYDRAULIC CYLINDERS:	Bore	Stroke
Lift, two	3.5-in. (89 mm)	15-in. (381 mm)
Angle, two ..	3.5-in. (89 mm)	13.375-in. (343 mm)
Tilt, one	3.5-in. (89 mm)	3-in. (76 mm)

Cylinder rods .. Ground, heat-treated, chrome-plated, polished
Cylinder pivot pins ..... Hardened steel (replaceable bushings)

Tracks (5-roller track frames with rock guards:)
Grouser (Dozer) ..... 16-in. (406 mm)
Triple semi-grouser open-center (loader) ..... 14-in. (356 mm)
Track shoes, each side (Dozer) 36
Track shoes, each side (Loader) 37
Ground contact area (Dozer) ..... 2,328 sq. in. (15 019 cm²)
Ground contact area (Loader) ..... 2,128 sq. in. (13 729 cm²)
Ground pressure (Dozer) .... 6.1 psi (0.429 kg/cm²)
Ground pressure (Loader) ... 7.8 psi (0.548 kg/cm²)
Length of track on ground (Dozer) 72.75 in. (1.85 m)
Length of track on ground (Loader) .. 76 in. (1.93 m)
Track gauge ..... 52 in. (1.32 m)
Carrier roller 1
Adjustment ..... Hydraulic
Clearance at rear crossbar ..... 14.25 in. (362 mm)

Blade: Reinforced, box-welded
Cutting edge ..... 3-piece, reversible, replaceable
Center section ..... 0.625 in. (61 mm)
End bits, cast steel ..... 0.75 in. (19 mm)

C-Frame ..... Reinforced, box-welded

LOADER SPECIFICATIONS

Buckets:	SAE Heaped Capacity	Width
Digging	1-1/4 cu. yd. (0.96 m³)	72.25 in. (1.84 m)
Multipurpose	1-1/4 cu. yd. (0.96 m³)	73 in. (1.85 m)

Operating Information:
Breakout force ..... 14,360 lb. (6 513 kg)
SAE tipping load ..... 9,200 lb. (4 173 kg)
Maximum dumping angle ..... 50 deg.
Raising time ..... 7.0 sec.
Dumping time ..... 1.6 sec.
Lowering time ..... 4.0 sec.

Loader SAE operating weight 16,700 lb. (7 582 kg)
SAE operating weight (6405) ..... 14,230 lb. (6 455 kg)
SAE operating weight (6410) ..... 14,170 lb. (6 428 kg)
SAE operating weight (6415) ..... 14,650 lb. (6 645 kg)

NOTE: The 6405, 6410, and 6415 Bulldozers fit all JD450-Series Crawlers.

Litho in U.S.A.

CAPACITIES	U.S.	Litres
Cooling system	4 gal.	15.1
Fuel tank	31 gal.	117.3
Crankcase including filter	9 qt.	8.5
Transmission	8 gal.	30.3
Final drive (each)	6.25 qt.	5.9
Hydraulic reservoir (loader)	7 gal.	26.5
Hydraulic reservoir (dozer)	6.4 gal.	24.5
Hydraulic system (loader)	13 gal.	49.2
Hydraulic system (6410 and 6415)	10 gal.	37.8
Hydraulic system (6405)	12.25 gal.	46.4
Steering clutch housing (each side)	28 qt.	26.5

ADDITIONAL STANDARD EQUIPMENT:

Front and rear bottom guard
Front hitch
Deluxe cushion seat with arm rests
Key switch with push button safety start
Electric hour meter
Cigar lighter
Vandal protection
Bottom guard counterweight with fixed drawbar (loader)
Radiator sand shield (loader)
Sprocket weights (loader)
Lights
Trash-resistant radiator
Outer sprocket shields (dozer)
Transistorized voltage regulator
Tachometer
Cold weather starting aid
Horn
Master electrical disconnect switch
Engine side shields
Front idler shield (loader)
Return to dig (loader)
Boom safety lock bar

SPECIAL EQUIPMENT:

PTO (1,000 rpm)
Upper and lower front idler shields
Spark arresting muffler
16-in. (406 mm) open-center grouser shoes (dozer)
18-in. (457 mm) open-center grouser shoes (dozer)
Auxiliary hydraulic system with breakaway couplings (dozer)
Swinging drawbar (dozer)
Remote hydraulic cylinder (dozer)
Radiator sand shield (dozer)
Cab (includes ROPS)
Winch drive
Two batteries
Rear counterweight for multi-purpose bucket or log loader (loader)
Limb risers with overhead exhaust
18-in. (457) grouser shoes (dozer)
ROPS with canopy and seat
Cast steel end bits

JD450-C CRAWLER BULLDOZER DIMENSIONS

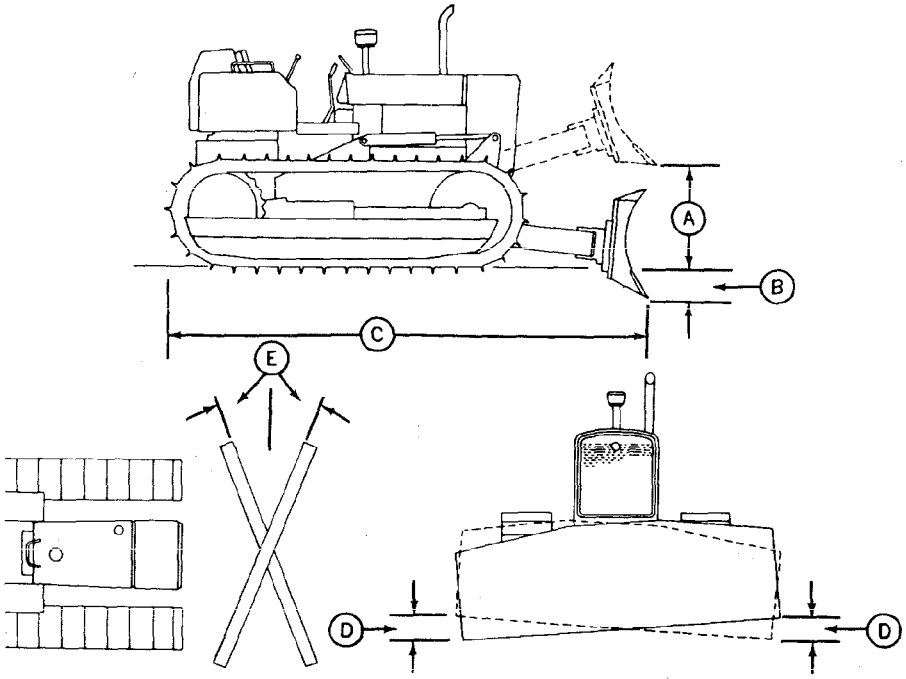

T32655

A - 6405 ..... 3 ft. 1.4 in. (949 mm)
6410 ..... 4 ft. (1.22 m)
6415 ..... 3 ft. 5.0 in. (1.04 m)

B - 6405 ..... 1 ft. 0.6 in. (321 mm)
6410 ..... 1 ft. 0.5 in. (317 mm)
6415 ..... 1 ft. 1 in. (330 mm)

C - 6405 ..... 11 ft. 10 in. (3.6 m)
6410 ..... 12 ft. 4.5 in. (3.8 m)
6415 ..... 11 ft. 5.0 in. (3.5 m)

D - 6415 ..... 11.5 in. (292 mm)
6405, 6410 ..... 11.0 in. (279 mm)

E - 6405, 6410 ..... 25 deg.

Blade length
6415 ..... 96.0 in. (2.4 m)
6410 ..... 106.0 in. (2.7 m)
6405 ..... 90 in. (2.3 m)

Blade height
6405, 6410, 6415 ..... 2 ft. 8 in. (813 mm)

JD450-C CRAWLER LOADER DIMENSIONS

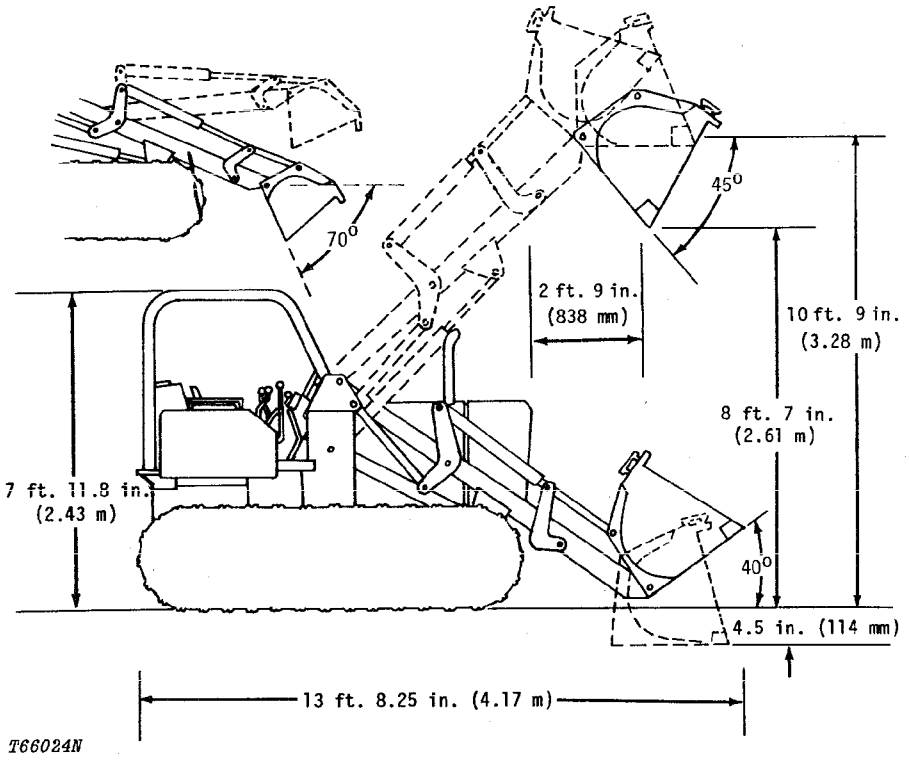

3110 RIPPER DIMENSIONS

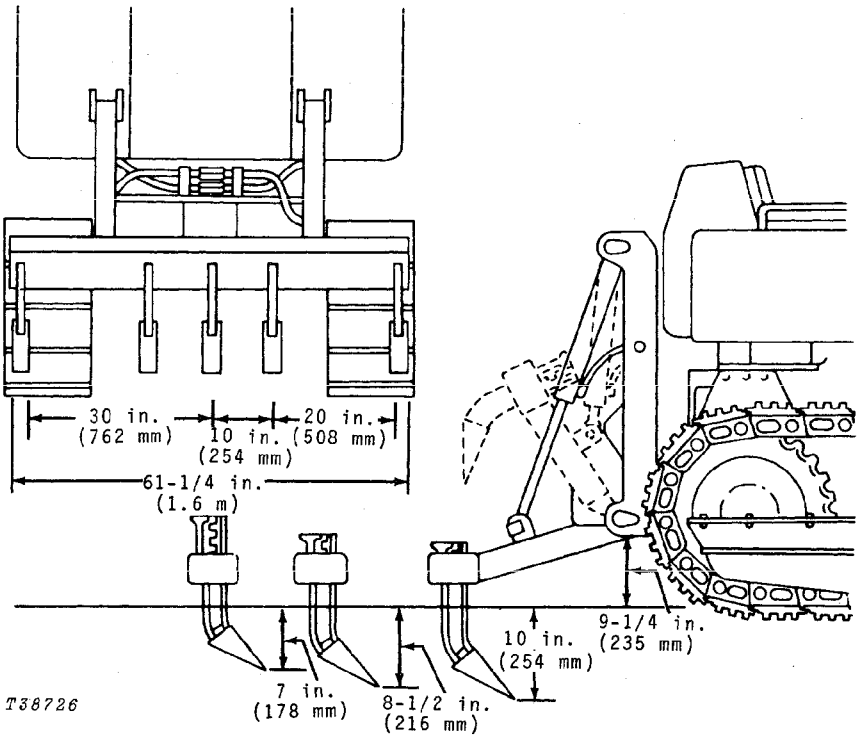

Width (overall)	66 inches (1.7 m)
Working width (max.)	61-1/4 inches (1.6 m)
Penetration (adjustable)	7, 8-1/2, 10 inches (178, 216 and 254 mm)
Cylinders	Double-Acting
Bore	2-1/2 inches (63.5 mm)
Stroke	15 inches (381 mm)
Cylinder rods	Ground, chrome plated, heat-treated, polished
Control	Single lever for lift and down-pressure
Construction:	
Frame	Welded box-angle; 6 x 8.25 in. (152 x 210 mm)
Shanks	Forged, heat-treated steel with replaceable points
Ground clearance at frame	9-1/4 inches (235 mm)
Weight with three teeth	685 pounds (311 kg)

LUMBER FORK (WITH CLAMP) DIMENSIONS

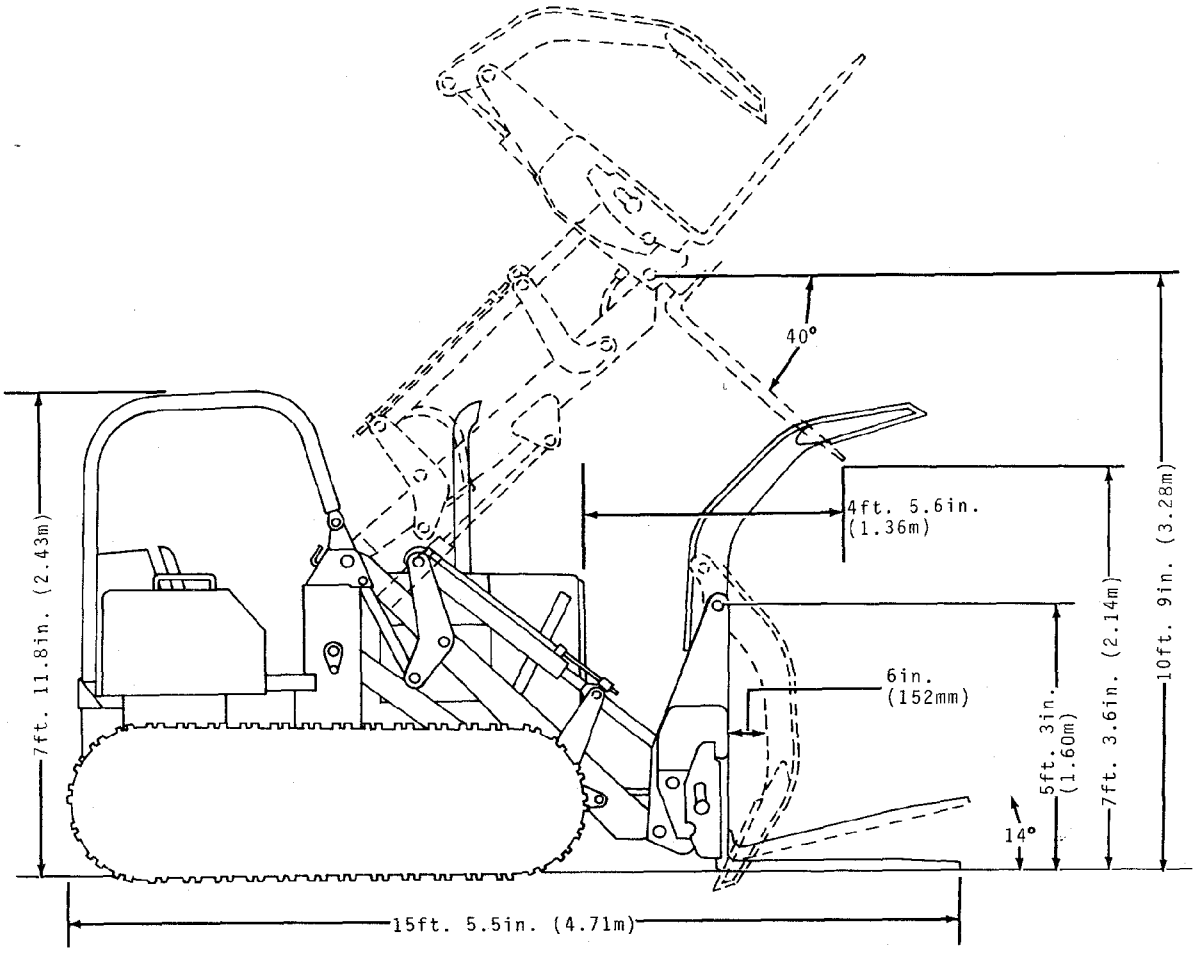

T57922N

Operating Data:

Lift capacity, full height, measured at 24 in. (610 mm) from heel of fork, with load centered:

Without clamp	7,750 lb. (3515 kg)
With clamp	6,410 lb. (2905 kg)
Maximum diameter with clamp closed	6 in. (152 mm)
Length of tines (heel-to-toe)	4 ft. (1.22 m)
Tine spacing with clamp	65.45 in. (1662 mm)
Tine spacing (center-to-center), adjustable, without clamp	15 in. (381 mm)
	21.5 in. (546 mm)
	43 in. (1.09 m)
	58 in. (1.47 m)
	70 in. (1.78 m)

Rollback at ground level:

Without clamp	19 deg.
With clamp	14 deg.

9300 BACKHOE DIMENSIONS

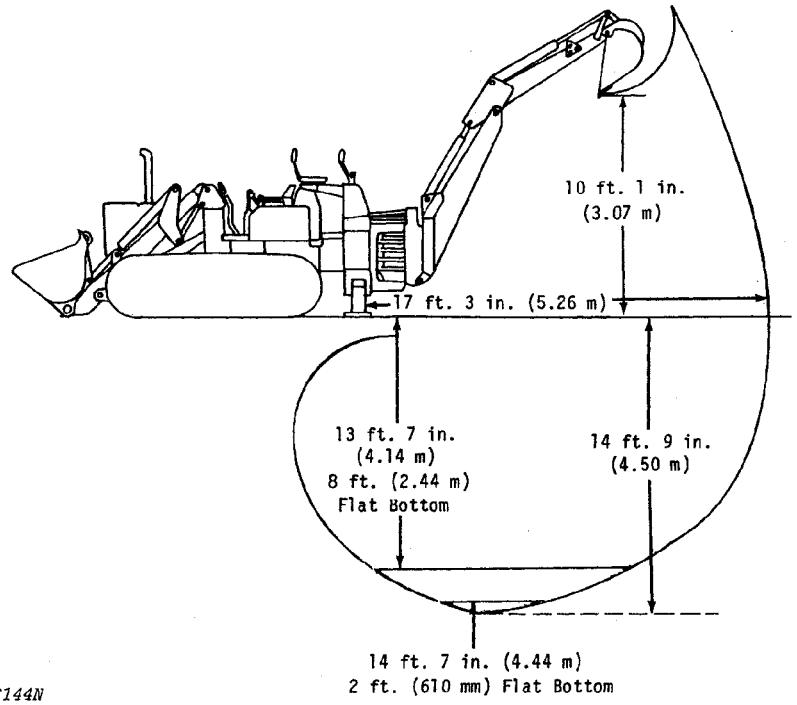

T66144N

Operating Information:

Digging Depth (ICED):

Maximum ..... 14 ft. 9 in. (4.50 m)
2-ft. (610 mm) flat bottom ..... 14 ft. 7 in. (4.44 m)
8-ft. (2.44 m) flat bottom ..... 13 ft. 7 in. (4.14 m)

Swing arc ..... 180 deg.
Digging force (bucket cylinder), ICED ..... 9226 lb. (41.35 kN) (4 185 kg)
Digging force, crowd cylinder ..... 5835 lb. (26.15 kN) (2 647 kg)
Reach from center of swing mast, ICED ..... 17 ft. 3 in. (5.26 m)
Loading height, ICED ..... 10 ft. 1 in. (3.07 m)
Transport height ..... 11 ft. 1 in. (3.38 m)

Hydraulic System

Pressure ..... 2250 psi (155.1 bar) (158.2 kg/cm²)
Pump ..... 28 gpm (106 L/min) @ 2500 engine rpm

Hydraulic Cylinders:

	Bore	Stroke	Rod Diameter
Boom	4.5-in. (114 mm)	34-in. (864 mm)	2.25-in. (57 mm)
Crowd	4-in. (102 mm)	33-in. (838 mm)	2-in. (51 mm)
Bucket	3.5-in. (89 mm)	27.37-in. (695 mm)	2.25-in. (57 mm)
Stabilizer	4-in. (102 mm)	16.62-in. (422 mm)	2-in. (51 mm)

Swing cylinder Rotary vane-type; built-in automatic swing cushion
Cylinder rods ..... Ground, heat-treated, chrome-plated, polished

Stabilizer Width:

Transport position ..... 7 ft. 3 in. (2.21 m)
Operating position (overall) ..... 10 ft. 6 in. (3.20 m)
Operating position (ICED) ..... 9 ft. 1 in. (2.77 m)

Buckets:	Width in.	Width mm	Struck Capacity cu. ft.	Struck Capacity m³
Standard	12	305	2.5	0.071
	16	406	3.6	0.102
	18	457	4.4	0.125
	24	610	6.0	0.170
	30	762	7.6	0.215
	36	914	7.2	0.204
Heavy-duty	18	457	4.4	0.125
	24	610	6.0	0.170
	30	762	7.6	0.215
Ejector	24	610	4.2	0.119

Attachments:

Ripper tooth replaces backhoe bucket. Cast steel, 225 lb. (102 kg) tooth has hardened replaceable tip. Bolt-on rubber street pads for stabilizer pads.

Shipping Weight:

Exclusive of mounting parts, bucket, and front counterweights ..... 3200 lb. (1 452 kg)

9550 BACKHOE DIMENSIONS

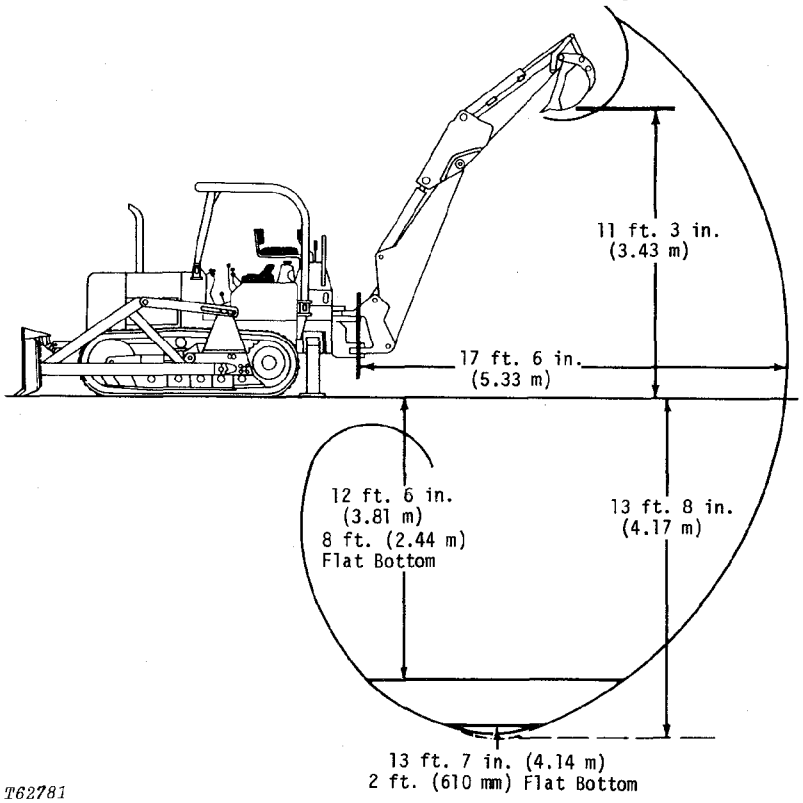

T62781

Operating Information:

Digging Depth (ICED):

Maximum ..... 13 ft. 8 in. (4.17 m)
2-ft. (610 mm) flat bottom ..... 13 ft. 7 in. (4.14 m)
8-ft. (2.44 m) flat bottom ..... 12 ft. 6 in. (3.81 m)
Swing arc ..... 180 deg.
Digging force, ICED ..... 7093 lb. (31.79 kN) (3 217 kg)
Digging force, crowd cylinder ..... 4019 lb. (18.01 kN) (1 823 kg)
Reach from center of swing mast, ICED ..... 17 ft. 6 in. (5.33 m)
Loading height, ICED ..... 11 ft. 3 in. (3.43 m)
Transport height ..... 10 ft. 11 in. (3.32 m)

Hydraulic System: Open-Center
Pressure ..... 2250 psi (155.1 bar) (165.2 kg/cm²)
Pump ..... 23 gpm (87 L/min) @ 2500 engine rpm

Hydraulic Cylinders:

	Bore	Stroke	Rod Diameter
Boom	4-in. (102 mm)	32.28-in. (822 mm)	2-in. (51 mm)
Crowd	3.5-in. (89 mm)	31.25-in. (794 mm)	1.75-in. (44 mm)
Bucket	3-in. (76 mm)	26.5-in. (673 mm)	1.75-in. (44 mm)
Swing	3.5-in. (89 mm)	8.88-in. (226 mm)	1.75-in. (44 mm)
Stabilizer	3.5-in. (89 mm)	15.5-in. (394 mm)	1.75-in. (44 mm)

Cylinder rods ..... Ground, heat-treated, chrome-plated, polished

Stabilizer Width:
Transport position ..... 6 ft. 8 in. (2.03 m)
Operating position (overall) ..... 9 ft. 8 in. (2.95 m)
Operating position (ICED) ..... 8 ft. 6 in. (2.59 m)

Buckets:	Width in.	Width mm	Struck Capacity cu. ft.	Struck Capacity m³
Standard	12	305	1.6	0.045
	16	406	2.6	0.074
	18	457	3.6	0.102
	24	610	4.8	0.136
	30	762	6.0	0.170
	36	914	7.2	0.204
Heavy-duty	18	457	3.6	0.102
	24	610	4.8	0.136
Cemetery special	36	914	7.2	0.204
Ejector	24	610	4.2	0.119

Attachments:
Ripper tooth replaces backhoe bucket. Cast steel, 225 lb. (102 kg) tooth has hardened replaceable tip. Bolt-on rubber street pads for stabilizer pads.

Shipping Weight:
W/mounting parts, w/o bucket ..... 2683 lb. (1 217 kg)